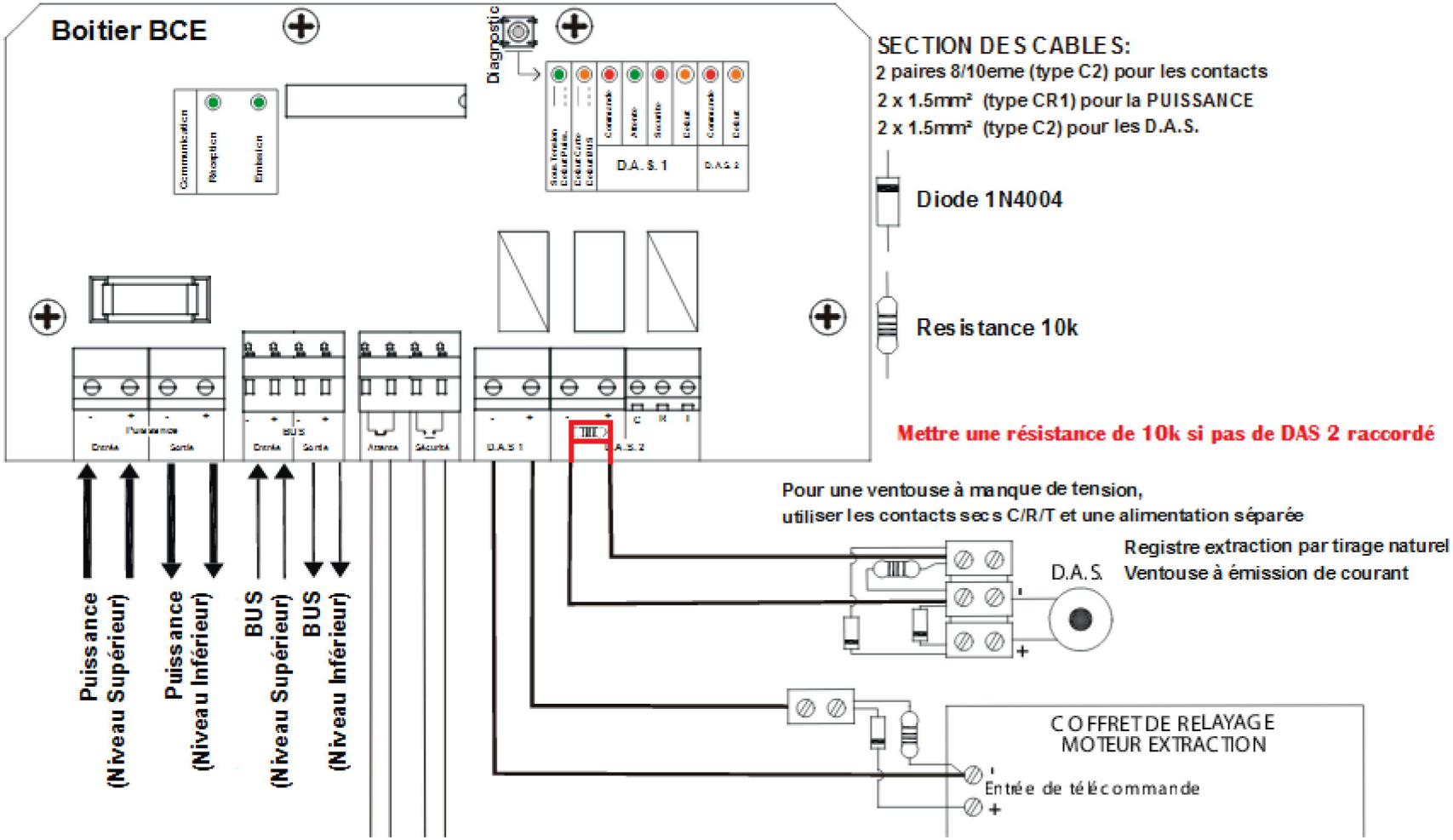K-7 RACCORDEMENT DU BOITIER EXTRACTION BCE